COPYRIGHT by MEIKO

Type code: B690VAP-nT-L-E1700-400/50-E-A3000-D1500-nC	
1.1	Machine drain DN 70, dia. 75 a, Onsite pipe system connection and siphon
2.1	Water connection of the machine: Soft warm water 50°C, DN 20, G 3/4 a max. 0,54 mmol/l $CaCO_3$ (max. 3°dH) consumption approx. 550 l for tank filling
2.2	Water connection of the machine: Soft cold water, DN 20, G 3/4 a max. 0,54 mmol/l $CaCO_3$ (max. 3°dH) consumption approx. 340 l/h for final rinse
3.1	Electrical connection of the machine: 3N PE 400V 50Hz nominal current / - capacity: 99.0 A / 62.7 kW Max. Elect. cable cross-section: 95 mm² free cable end from finished floor level/Wall: approx. 4 m ⏚ Voltage equalising cable
6.0	Heat load of warewash area The values apply for the following room conditions: Room temperature 22 °C, rel. humidity 55 % The total heat load includes 6.1 and 6.2
6.1	Machine exhaust air pipe, dia. 360 mm Heat load of the machine in normal washing operation: Latent: 3.5 kW, perceptible: 2.4 kW, total: 5.9 kW At a freshwater supply temperature of approx. 12°C
6.2	The heat load of the wash ware must be considered separately.
	For the total space load, all other space loads must be considered. The space ventilation must be designed in accordance with EN 16282.
	Separation
Machine Equipment	
Exhaust air heat recovery	

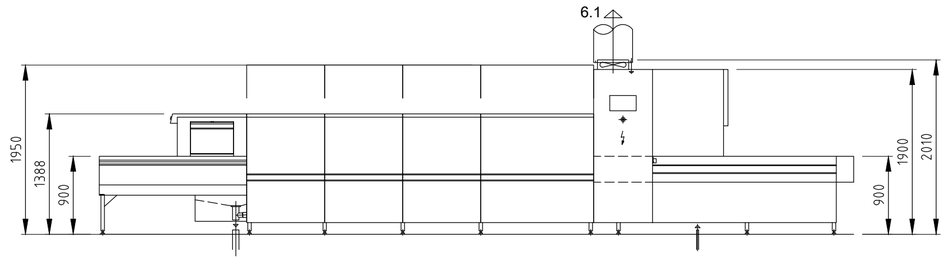

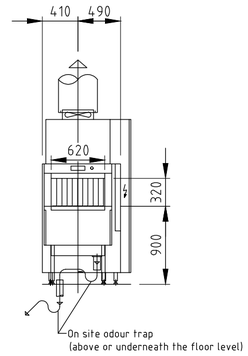

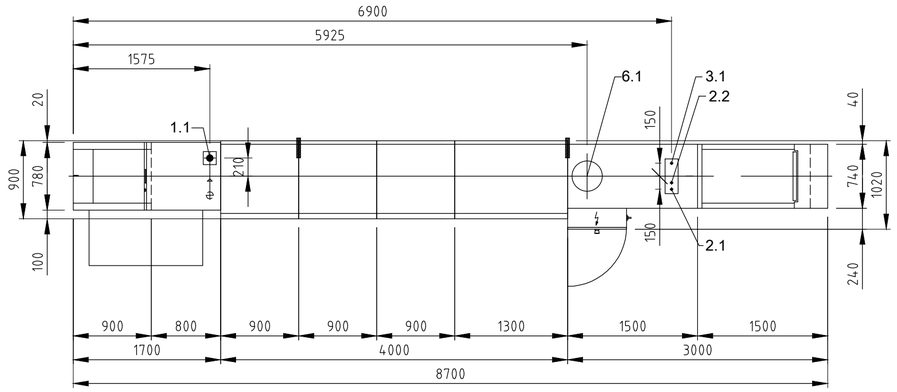

RECOMMENDATION AIR OUTLET EXTENSION ON SITE

(exhaust air outlet or exhaust heat recovery)

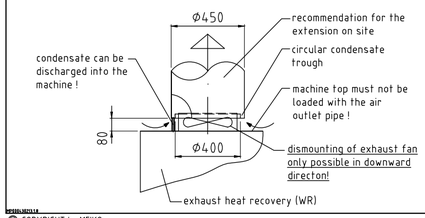

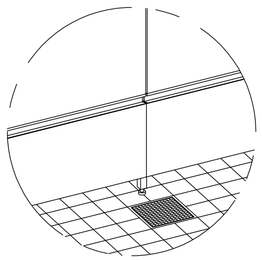

On-site drainage
provide in front of the machine!

MEIKO Australia-Pacific Pty Ltd
Unit 4, 72 - 74 Gibbes Street
Chatswood NSW 2067
TEL. +61-1300 367 730, Telefax +61-1300 656 420
E-MAIL: info@meiko.com.au

This drawing may not be neither passed to third parties for their information or copied or used for competitive purposes without our consent. All rights reserved. We reserve the right to make changes resulting from technical progress. This drawing was computer generated and is not subject to the checking and any release process; it is also not subject to change management.
Please note:
This document is only valid in conjunction with the conditions defined in Supplementary Sheet "Important Information". These can be requested from the manufacturer or downloaded from the Partnernet.

Revision		
Reference UPSTER STANDARD DRAWING / AUS		Type UPSTER B690VAP CSS-TOP L-R ELECTRO
Drawing-No. S00086477		Order-No.
Scale 1:50	drawn: 04.08.2020 m-iplan	checked: 04.08.2020 m-iplan

AUS EN